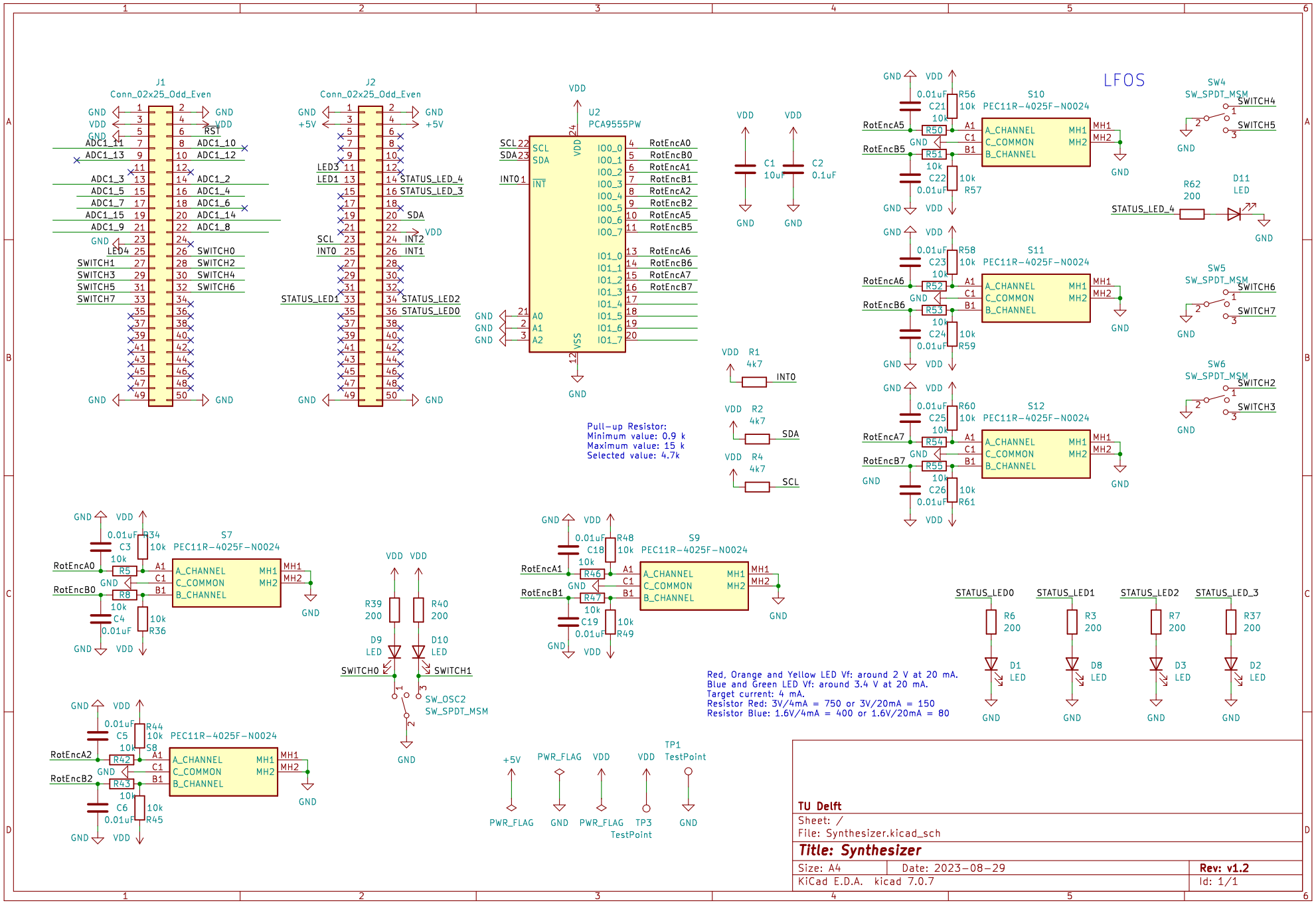
J1
Conn_02x25_Odd_Even
J2
Conn_02x25_Odd_Even
U2
PCA9555PW
LFOS
S10
PEC11R-4025F-N0024
S11
PEC11R-4025F-N0024
S12
PEC11R-4025F-N0024
S7
PEC11R-4025F-N0024
S9
PEC11R-4025F-N0024
S8
PEC11R-4025F-N0024
SW4
SW_SPDT_MSM
SW5
SW_SPDT_MSM
SW6
SW_SPDT_MSM
SW_OSC2
SW_SPDT_MSM
Pull-up Resistor:
Minimum value: 0.9 k
Maximum value: 15 k
Selected value: 4.7k
Red, Orange and Yellow LED Vf: around 2 V at 20 mA.
Blue and Green LED Vf: around 3.4 V at 20 mA.
Target current: 4 mA.
Resistor Red: 3V/4mA = 750 or 3V/20mA = 150
Resistor Blue: 1.6V/4mA = 400 or 1.6V/20mA = 80
TU Delft
Sheet: /
File: Synthesizer.kicad_sch
Title: Synthesizer
Size: A4
Date: 2023-08-29
Rev: v1.2
KiCad E.D.A. kicad 7.0.7
Id: 1/1